SIEMENS

1 781

1781P01

Symaro™

Immersion Temperature Sensors QAE21...

Passive sensors for acquiring the water temperature in pipes and tanks.

Use

The QAE21… immersion temperature sensors are for use in ventilation and air conditioning plants for:

- Controlling or limiting the flow temperature
- Limiting the return temperature
- Controlling the DHW temperature

Type summary

Typ	*Outfit*	*Immersion length*	*Nominal pressure*	*Sensing element*	*Protection degree of housing*
QAE2111.010	With clamp for protection pocket [1]	100 mm	PN [3]	Pt 100	IP42 (IP54) [2]
QAE2111.015	With clamp for protection pocket [1]	150 mm	PN [3]	Pt 100	IP42 (IP54) [2]
QAE2112.010	With clamp for protection pocket [1]	100 mm	PN [3]	Pt 1000	IP42 (IP54) [2]
QAE2112.015	With clamp for protection pocket [1]	150 mm	PN [3]	Pt 1000	IP42 (IP54) [2]
QAE2120.010	Including protection pocket with threaded nipple G ½ A	100 mm	PN 10	LG-Ni 1000	IP42 (IP54) [2]
QAE2120.015	Including protection pocket with threaded nipple G ½ A	150 mm	PN 10	LG-Ni 1000	IP42 (IP54) [2]
QAE2121.010	With clamp for protection pocket [1]	100 mm	PN [3]	LG-Ni 1000	IP42 (IP54) [2]
QAE2121.015	With clamp for protection pocket [1]	150 mm	PN [3]	LG-Ni 1000	IP42 (IP54) [2]
QAE2130.010	With clamp for protection pocket [1]	100 mm	PN [3]	NTC 10k	IP42 (IP54) [2]
QAE2130.015	With clamp for protection pocket [1]	150 mm	PN [3]	NTC 10k	IP42 (IP54) [2]

1) Protection pocket required (not included as standard)
2) IP54 with cable entry gland M16 (not included as standard)
3) Depending on the type of protection pocket used

Ordering

When ordering, please give name and type reference, e.g. :
Immersion temperature sensor **QAE2120.010** or protection pocket **ALT-SS100**

Equipment combinations

All systems or devices capable of acquiring and handling the sensor's passive output signal.

Function

The sensor acquires the medium temperature via its sensing element whose resistance value changes as a function of the temperature.
The signal is delivered for further handling by a suitable controller.

Sensing elements

LG-Ni 1000 Characteristic

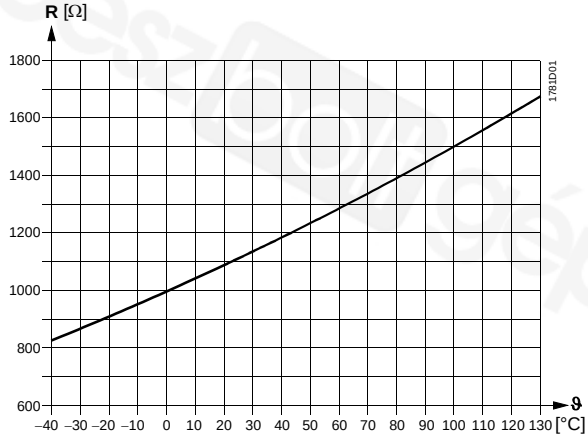

Accuracy

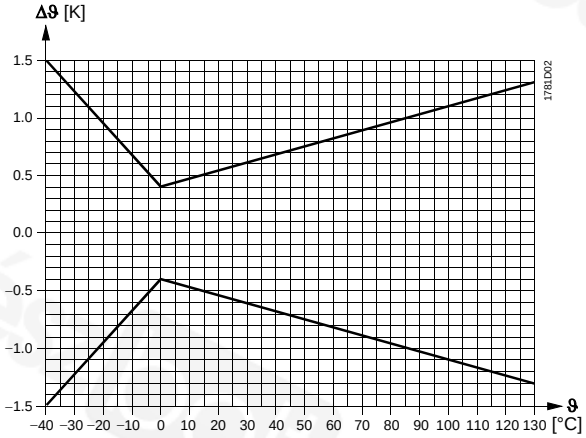

Pt 100 (class B) Characteristic

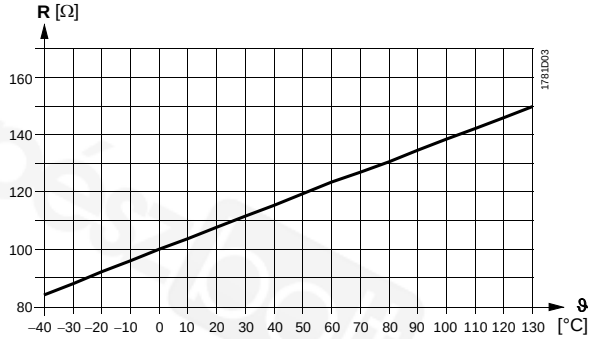

Accuracy

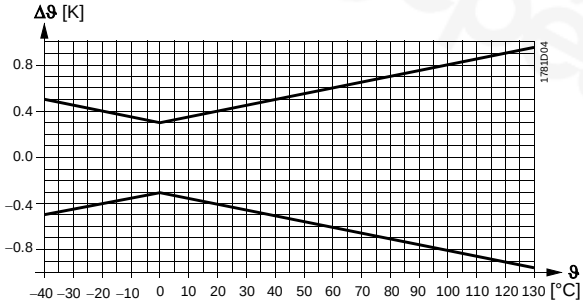

Pt 1000 (class B) Characteristic

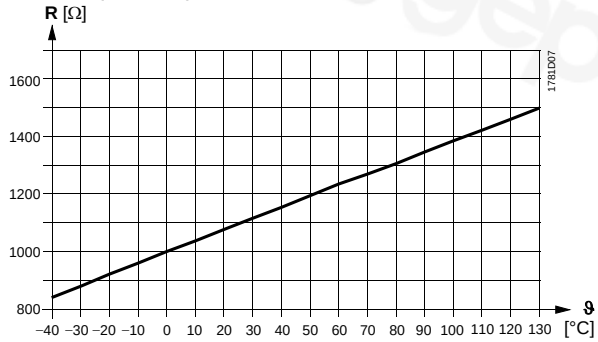

Accuracy

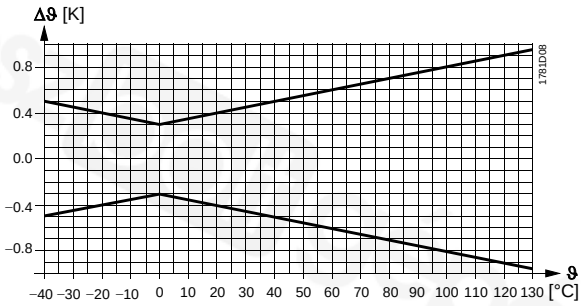

NTC 10k Characteristic

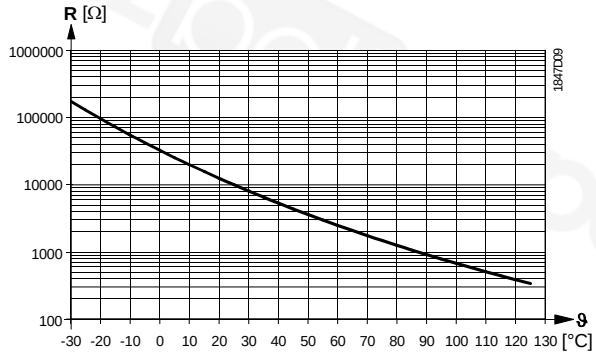

Accuracy

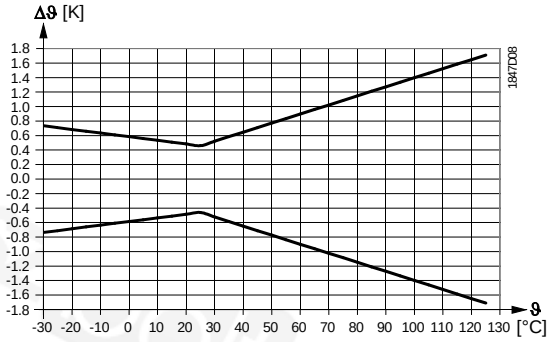

Legend

R	Resistance value in Ohm
ϑ	Temperature in degrees Celsius
Δϑ	Temperature differential in Kelvin

Mechanical design

The immersion temperature sensors consist of the following components:

- Two-sectional plastic housing comprised of base with connection terminals and removable cover (snap-on design)
- Immersion rod complete with sensing element

The connection terminals can be accessed after removing the cover. The cable entry is via a grommet which, if required, can be replaced by a cable entry gland M16 (IP54).

Accessories (not included in standard delivery)

Name	*Material*	*Nominal pressure*	*Type of sealing*	*Immersion length*	*Type reference*
Compression fitting	V4A (1.4571)	PN 16	Threaded with sealing means	---	**AQE2102**
Protection pocket	Brass (CuZn37)	PN 10	Threaded with sealing means	100 mm	**ALT-SB100**
Protection pocket	Brass (CuZn37)	PN 10	Threaded with sealing means	150 mm	**ALT-SB150**
Protection pocket	V4A (1.4571)	PN 16	Threaded with sealing means	100 mm	**ALT-SS100**
Protection pocket	V4A (1.4571)	PN 16	Threaded with sealing means	150 mm	**ALT-SS150**
Protection pocket	V4A (1.4571)	PN 40	With flange for flat seal	100 mm	**ALT-SSF100**
Protection pocket	V4A (1.4571)	PN 40	With flange for flat seal	150 mm	**ALT-SSF150**
M16 cable entry gland	-	-	-	-	**7466200470**

For other protection pocket accessories, refer to Data Sheet N1194.

Engineering notes

Protection pockets made of Brass may not be used with nominal pressures over PN 10 or at temperatures over 130° C. For higher nominal pressures or temperatures up to max. 135 °C the protection pocker is to omit (max. PN 16) or a protection pocket made of stainless steel (V4A) is required (see table accessories).

The max. media temperature for the QAE2130.xx is 125 °C!

Mounting and installation notes

Depending on use, the sensor should be located as follows:

- For flow temperature control:
  In the heating flow:
  – Directly after the pump if the pump is located in the flow
  – 1.5 to 2 m after the mixing valve if the pump is located in the return
- For return temperature limitation:
  In the return at a location where the temperature can be correctly acquired

The sensor should be installed in an elbow such that the immersion rod or the protection pocket faces the direction of flow. The water must be well mixed where the temperature is acquired. This is downstream from the pump or, if the pump is mounted in the return, at least 1.5 m after the mixing point.

The sensor should be mounted such that the cable does not enter from the top.

With all types of sensors, the immersion length must be a minimum of 60 mm!

The sensor must not be covered by lagging.

To fit the sensor, a threaded fitting or T-piece G ½ must be welded into the pipe.

Mounting positions

permitted: *not permitted:*

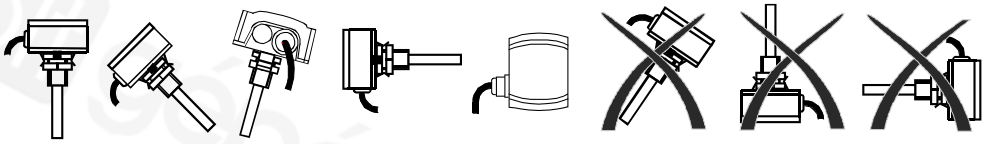

Mounting

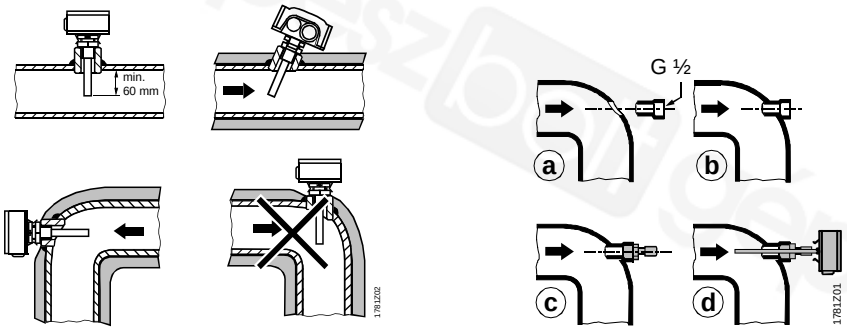

Note!

- For sensors with non-sealing threaded nipples G ½, sealing means must be used with the threaded connection (e.g. hemp, Teflon tape or similar)
- Tighten compression fitting AQE2102 on the sensor's immersion rod
  – *When tightening for the first time:*
  Turn the nut about 1 ½ turns until strong resistance is felt. Then, slightly loosen the nut again and retighten ¼ turn
  – *For premounted compression fittings or repeated fitting:*
  Screw the nut on until finger-tight. Then, tighten with a spanner ¼ turn for the final fit

Mounting Instructions are printed on the packaging.

Disposal

The devices are considered electronics devices for disposal in terms of European Directive 2012/19/EU and may not be disposed of as domestic waste.

- Dispose of the device via the channels provided for this purpose.
- Comply with all local and currently applicable laws and regulations.

Technical data

Functional data	Measuring range	−30...+125 °C for NTC-Type −30...+130 °C other types
	Sensing element	refer to "Type summary"
	Time constant With protection pocket Without protection pocket	 approx. 30 s approx. 8 s
	Measuring accuracy	refer to "Function"
	Immersion length	refer to "Type summary"
	Nominal pressure	refer to "Type summary"
Degree of protection	Protection class	III according to EN 60730-1
	Protection degree of housing	refer to "Type summary" according to EN 60529
Electrical connections	Screw terminals for	1 x 2.5 mm^2 or x 1.5 mm^2
	Cable entry via Grommet Cable entry gland	 for 5.5...7.2 mm dia. cable M 16 x 1.5
	Perm. cable lengths	refer to Data Sheet of controller
Environmental conditions	Operation Climatic condition Temperature (housing) Humidity (housing)	to IEC 721-3-3 class 3K5 −40...+70 °C 5...95 % r.h.
	Transport Climatic condition Temperature Humidity Mechanical environmental conditions	to EC 721-3-2 class 2K3 −25...+70 °C <95 % r.h. class 2M2
Materials and colors	Base	polycarbonate, RAL 7001 (silver-grey)
	Cover	polycarbonate, RAL 7035 (light-grey)
	Immersion rod	stainless steel to DIN 17 440, steel 1.4571
	Protection pocket	brass (CuZn37)
	Compression fitting	stainless steel 1.4404, 1.4435, 1.4571
	Cable entry gland M 16 x 1.5	PA, RAL 7035 (light-grey)
	Packaging	corrugated cardboard

Directives and Standards	Product standard	EN 60730-1 Automatic electrical controls for household and similar use
	Electromagnetic compatibility (Applications)	For use in residential, commerce, light-industrial and industrial environments
	UL	UL 873, http://ul.com/database
Environmental compatibility	The product environmental declaration CE1E1761*) contains data on environmentally compatible product design and assessments (RoHS compliance, materials composition, packaging, environmental benefit, disposal).	
Weight	Incl. Packaging	
	QAE2111.010	approx. 0,13 kg
	QAE2111.015	approx. 0,15 kg
	QAE2112.010	approx. 0,13 kg
	QAE2112.015	approx. 0,15 kg
	QAE2120.010	approx. 0,21 kg
	QAE2120.015	approx. 0,23 kg
	QAE2121.010	approx. 0,13 kg
	QAE2121.015	approx. 0,14 kg
	QAE2130.010	approx. 0,13 kg
	QAE2130.015	approx. 0,15 kg

*) The documents can be downloaded from http://siemens.com/bt/download.

Internal diagram

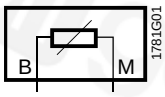

The internal diagram is identical for all types of immersion temperature sensors covered by this Data Sheet.
The connecting wires are interchangeable.

Dimensions (in mm)

QAE2120.010
QAE2120.015

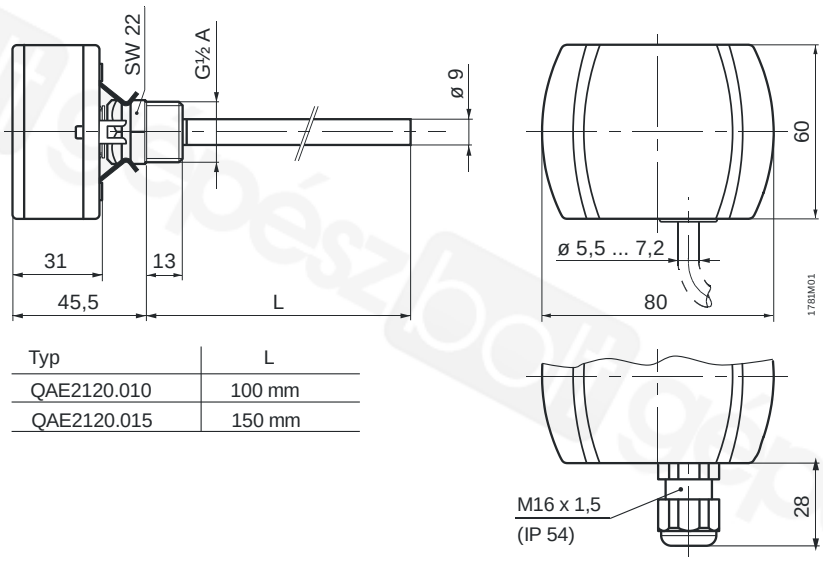

Typ	L
QAE2120.010	100 mm
QAE2120.015	150 mm

QAE2111.010
QAE2111.015
QAE2112.010
QAE2112.015
QAE2121.010
QAE2121.015
QAE2130.010
QAE2130.015

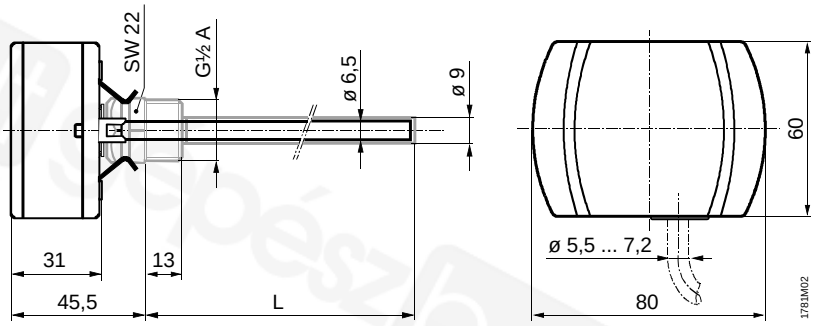

Typ	L
QAE2111.010	100 mm
QAE2111.015	150 mm
QAE2112.010	100 mm
QAE2112.015	150 mm
QAE2121.010	100 mm
QAE2121.015	150 mm
QAE2130.010	100 mm
QAE2130.015	150 mm

Variable immersion length: with accessory AQE2102

Accessory
compression fitting
AQE2102

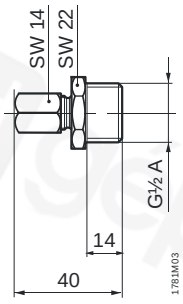

© 2004–2014 Siemens Switzerland Ltd.