SIEMENS

acvatix

Butterfly Valves PN 6, PN 10, PN 16

VKF46... VKF46...TS

- **Grey cast iron housing EN-GJL-250 (to DN 300)**
  nodular cast iron housing EN-GJS-400-15 (from DN 350)
- **DN 40…600**
- **k_{vs} 50…29300 m^3/h**
- **For fitting between PN 6, PN 10, PN 16 counter-flanges to ISO 7005**
- **Tight-closing in accordance with EN 12266-1, leakage rate A**
- **No maintenance required**
- **Optional ASK46… manual adjuster (to DN 400)**
- **Optionally equipped with electromotoric actuators SQL35.00, SQL85.00 or SQL36E…**

Use

For use as motorised or manual control or shut-off valves in heating, ventilation and air conditioning systems, in shipbuilding and in power station technics

- In open and closed circuits
- For 2-position controls (open/closed)
- For 3-position controls
- For boiler, chiller and cooling tower sequencing circuits
- To open or close the flow to a heat exchanger or to complete plant sections

Type summary

Type		DN	k_{vs}	Actuator flange	Velocity of flow [2]	
VKF46…	VKF46…TS [1]		[m³/h]	EN ISO 5211	Water [m/s]	Gas [m/s]
VKF46.40		40	50	F04	4.5	60
VKF46.50		50	85			
VKF46.65		65	215			
VKF46.80		80	420	F05		
VKF46.100		100	800			
VKF46.125		125	1010			
VKF46.150		150	2100	F07		
VKF46.200		200	4000			
VKF46.250		250	6400	F10		
VKF46.300		300	8500			
VKF46.350	**VKF46.350TS**	350	11500	F10 [3]		
VKF46.400	**VKF46.400TS**	400	14500			
VKF46.450	**VKF46.450TS**	450	20500	☐ 32 mm		
VKF46.500	**VKF46.500TS**	500	21000			
VKF46.600	**VKF46.600TS**	600	29300			

[1] TS = unsplit shaft
[2] recommended maximum velocity of flow and the butterfly valve fully open
[3] ☐ 32 mm for VKF46.350TS, VKF46.400TS

k_{vs} Nominal flow rate of cold water (5…30 °C) through the fully open butterfly valve by a differential pressure of 100 kPa (1 bar)

Accessories

Manual adjuster

ASK46.1

ASK46.2

ASK46.3

- Lockable level with fixed stops at 0 and 90° as well as precision positioning in 6° increments.
- Anti-condensation barrier
- Simple installation

The Mounting Instructions 4 319 0196 0 are enclosed.

ASK46.4

- Manually operated worm gear, allows infinitely variable adjustment between 0 and 90°.
- Self locking
- Position indication
- Anti-condensation barrier
- Simple installation

The Mounting Instructions 4 319 0197 0 are enclosed.

Mounting kit

ASK35.1

ASK35.2

For mounting SQL35.00, SQL85.00 actuators on VKF46…, DN 40…125

Order

Butterfly valve, actuator resp. manual adjuster or mounting kit must be ordered separately.
When ordering please specify the quantity, product name and type code.

Example:
1 Butterfly valve VKF46.50
1 Manual adjuster ASK46.1

Delivery

Butterfly valve, actuator, manual adjuster and mounting kit are packed separately.

Equipment combinations

Butterfly valve	Manual adjuster ASK46...	Mounting kit ASK35...	Electromotoric actuators SQL35.00 SQL85.00	SQL36E50F04 [1]	SQL36E50F05 [1]	SQL36E65	SQL36E110	SQL36E160
			Δp_s [kPa]					
VKF46.40	ASK46.1	ASK35.1	1600	1600				
VKF46.50								
VKF46.65								
VKF46.80	ASK46.2	ASK35.2			1600			
VKF46.100								
VKF46.125			1000		1000			
VKF46.150	ASK46.3					1600		
VKF46.200						1000		
VKF46.250	ASK46.4						1000	
VKF46.300								
VKF46.350							600	
VKF46.400							300	
VKF46.450	on request							300
VKF46.500								
VKF46.600								
VKF46.350TS	on request							1000
VKF46.400TS								
VKF46.450TS								
VKF46.500TS								
VKF46.600TS								

[1] SQL36E50… actuators can be mounted directly on VKF46… butterfly valves.

Δp_s Maximum permissible differential pressure at which the motorised butterfly valve will close securely against the pressure (close off pressure)

Actuator overview

Type	Actuator type	Operating voltage	Positioning signal	Spring return	Positioning time for 90° at 50 Hz without SEZ31.1	Positioning time for 90° at 50 Hz with SEZ31.1	Positioning force	Date sheet
SQL35.00	Electro-motoric	AC 230 V	3-position	No	125 s		20 Nm	N4505
SQL85.00		AC 24 V						
SQL36E50F04		AC 230 V			25 s		40 Nm	
SQL36E50F05								
SQL36E65					6 s	30…180 s	100 Nm	
SQL36E110					12 s	60…360 s	400 Nm	
SQL36E160					24 s	120…720 s	1200 Nm	

Mechanical design

Butterfly valve

Ring format, grey cast iron or nodular cast iron housing with EPDM liner and multiple shaft bearing.
The liner is also used to seal the flange. There is thus no contact between the medium and the valve housing.
The valve has a swing-through disc (angle of rotation 360°). The position of the valve disc is indicated by a notch on the front of the shaft.

Sizing diagram

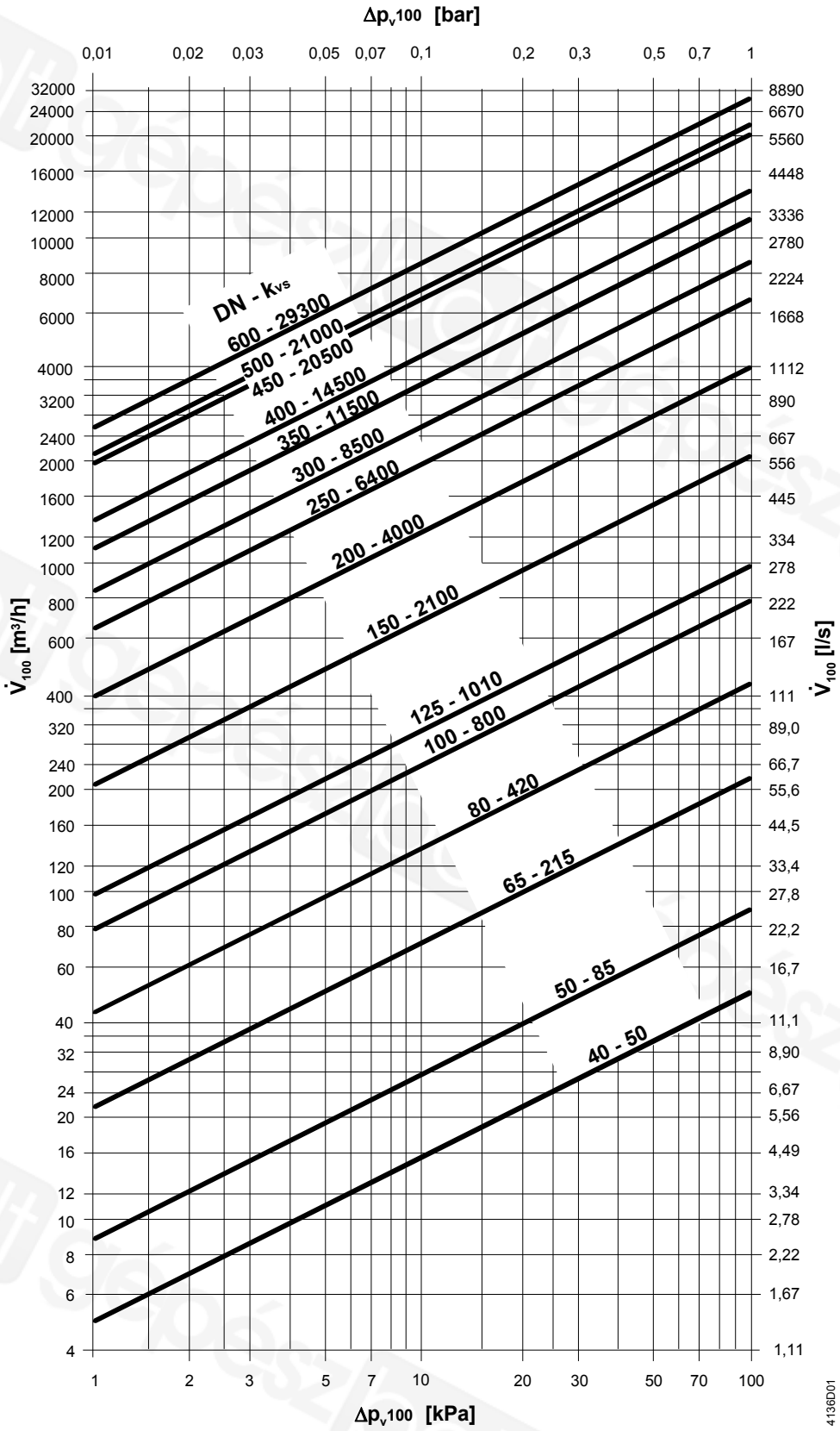

Δp_{v100}	=	Differential pressure across the fully open butterfly valve by a volume flow $\dot{V}_{100}$
$\dot{V}_{100}$	=	Volume flow through the fully open butterfly valve
100 kPa	=	1 bar ≈ 10 mWC
1 m^3/ h	=	0.278 l/s water at 20 °C

Flow characteristic

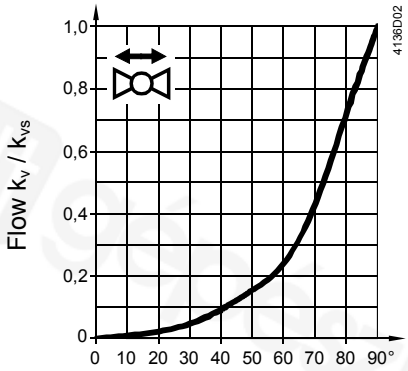

Engineering notes

Single flange mounting is possible: DN 20…250: 300 kPa
DN 300…600: 200 kPa

The VKF46... butterfly valves can accommodate flow in either direction.

Warning ⚠ To avoid pressure shocks on the butterfly valve, the VKF46…. must be driven to its fully open position (either manually or via positioning signal Y1) prior to activating the pump(s).

Mounting notes

The Mounting Instructions 4 319 0198 0 are enclosed in the product packaging.

⚠ VKF46… butterfly valves can be mounted in PN 6, PN 10, PN 16 applications.
Use VKF46.450…600 in PN 16 applications only!

Do not use additional flange sealings.

Orientation

VKF 46… + SQL36E…

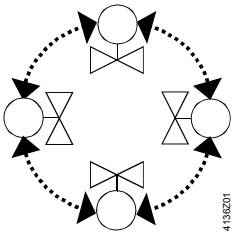

Any

VKF46… + SQL35…, SQL85…

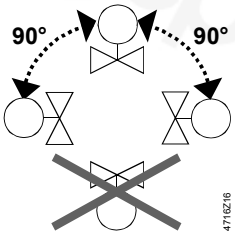

Upright to horizontal

Maintenance

The VKF46... butterfly valves require no maintenance.

Caution ⚠ Before performing any service work on the valve, actuator or mounting kit:

- Switch off the pump and power supply
- Close the main shut-off valves in the pipework
- Release pressure in the pipes and allow them to cool down completely

If necessary, disconnect electrical connections from terminals.

The valve must be re-commissioned only with the manual adjuster or the actuator correctly assembled.

Disposal

Before disposal the valve must be dismantled and separated into its various constituent materials.
Legislation may demand special handling of certain components, or it may be sensible from a ecological point of view.
Current local legislation must be observed.

Warranty

The technical data given for these applications is valid only in conjunction with the Siemens actuators as detailed under «Equipment combinations».
All terms of the warranty will be invalidated by the use of actuators from other manufacturers.

Technical data

Operating data	PN class		PN 16 to EN1333
	Permissible operating pressure		1600 kPa (16 bar)
	Flow characteristic		according to the diagram on page 5
	Leakage rate		A to EN 12266-1 (tight-closing)
	Permissible media		chilled water, drinking water, low temperature hot water, cooling water, brine, demineralised water (softened), water with anti-freeze, air recommendation: water treatment to VDI2035
	Medium temperature		–10…120 °C
	Flanged connection for pipes [1]		PN 6, PN 10, PN 16 to ISO7005
	Overall length		DIN EN 558, series 20
	Flange for actuator or manual adjuster		EN ISO 5211
	Angle of rotation		90°
Materials	Housing	to DN 300	grey cast iron EN-GJL-250
		from DN 350	nodular cast iron EN-GJS-400-15
	Shaft		stainless steel 1.4101
	Valve disc	to DN 300	stainless steel 1.4408
		from DN 350	nickel-plated steel St 52.3
	Manual adjuster	ASK46.1…	die-cast aluminium
	Liner		EPDM
Dimensions			refer to «Dimensions»
Weight			refer to «Dimensions»

[1] VKF46.450…600 are not suited for PN 6 and PN 10

Dimensions

Dimensions in mm

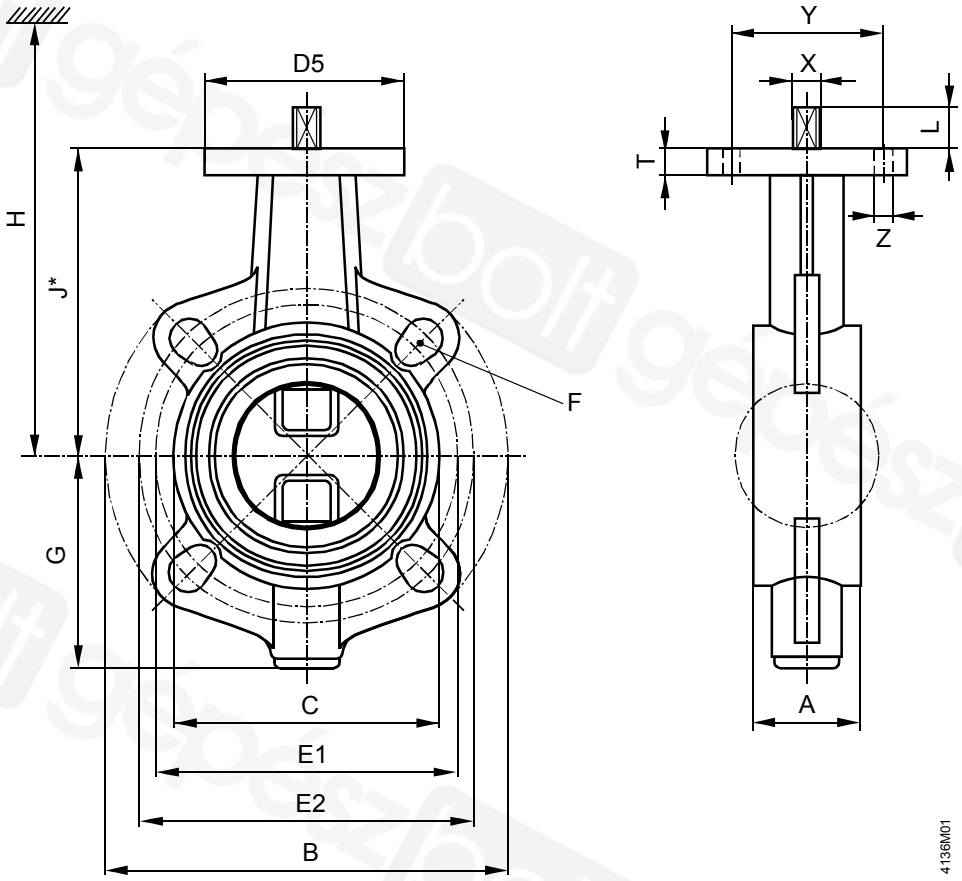

Type	DN	A	B ø	C ø	G	J *	T	D5	L	PN 6 øE1	PN 6 F	PN 10 øE2	PN 10 F	PN 16 øE2	PN 16 F	X □	EN 5211	Y	Z	kg [kg]
VKF46.40	40	33	140	82	66	113	10	54	11.5	100	M12 (4x)	110	M16 (4x)	110	M16 (4x)	11	F04	42	6	1.8
VKF46.50	50	43	157	95	85	126	10	54	11.5	110	M12 (4x)	125	M16 (4x)	125	M16 (4x)					2.2
VKF46.65	65	46	177	115	93.5	134.5	10	54	11.5	130	M12 (4x)	145	M16 (4x)	145	M16 (4x)					2.9
VKF46.80	80	46	192	138	104.5	157	10	65	15.5	150	M16 (4x)	160	M16 (8x)	160	M16 (8x)	14	F05	50	7	4.0
VKF46.100	100	52	221	158	115.5	167.5	10	65	15.5	170	M16 (4x)	180	M16 (8x)	180	M16 (8x)					5.2
VKF46.125	125	56	256	188	128	180	10	65	15.5	200	M16 (8x)	210	M16 (8x)	210	M16 (8x)					6.9
VKF46.150	150	56	281	212	152	203	12	90	18.5	225	M16 (8x)	240	M20 (8x)	240	M20 (8x)	17	F07	70	9	9.5
VKF46.200	200	60	320	268	177.5	228.5	12	90	18.5	280	M16 (8x)	295	M20 (8x)	295	M20(12x)					13.2
VKF46.250	250	68	403	320	213	266	15	125	23.5	335	M16(12x)	350	M20(12x)	355	M24(12x)	22	F10	102	11	22.5
VKF46.300	300	78	478	370	238	290.5	15	125	23.5	395	M20(12x)	400	M20(12x)	410	M24(12x)					31.5
VKF46.350	350	78	522	408	269	332	20	125	28.5	445	M20(12x)	460	M20(16x)	470	M24(16x)					39.4
VKF46.400	400	102	596	470	313	363	20	125	28.5	495	M20(16x)	515	M24(16x)	525	M27(16x)					58.7
VKF46.450	450	114	630	530	335	397	25	210	≤140					585	M27(20x)	32		165	22	91
VKF46.500	500	127	710	574	371	437	23	210	≤140					650	M30(20x)					107
VKF46.600	600	154	830	675	435	498	24	210	≤140					770	M33(20x)					171
VKF46.350TS	350	78	522	408	273	332	20	125	28.5	445	M20(12x)	460	M20(16x)	470	M24(16x)	32		102	11	45
VKF46.400TS	400	102	596	470	317	363	20	125	28.5	495	M20(16x)	515	M24(16x)	525	M27(16x)					64.5
VKF46.450TS	450	114	630	530	346	397	25	210	≤140					585	M27(20x)			165	22	95.5
VKF46.500TS	500	127	710	574	382	437	23	210	≤140					650	M30(20x)					113.5
VKF46.600TS	600	154	830	675	445	498	24	210	≤140					770	M33(20x)					198

A Corresponds to overall length acc. to EN558, series 20 (except DN 350)
* Dimension for actuator connection from centre of pipe

H, overall height of valve and actuator

= Valve installation height (J*) from middle of pipe
+ Installation height of actuator
- SQL35.00 / SQL85.00 incl. mounting kit ASK35... = 168 mm (DN 40…125)
- SQL36E50… = 210 mm (DN40…125)
- SQL36E65 = 235 mm (DN150…200)
- SQL36E110 = 257 mm (DN250…400)
- SQL36E160 = 282 mm (DN350…600)

+ Minimum clearance (> 200 mm) from ceiling or wall for mounting, connection, operation, service etc.

ASK46.1
ASK46.2
ASK46.3

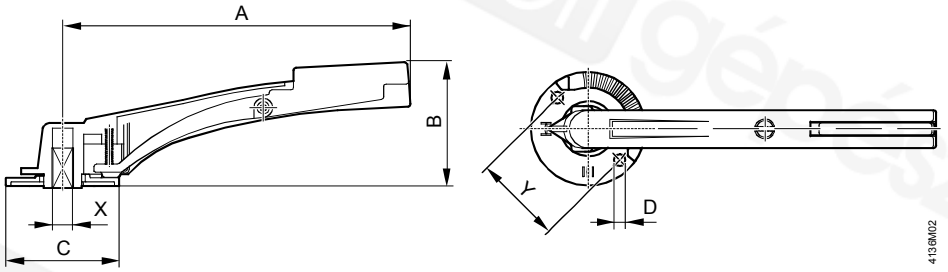

Type	DN	A	B	C	D ø	X □	Y	kg [kg]
ASK46.1	40...65	155	68.5	67.5	5.5	11	42	0.11
ASK46.2	80...125	195	79.5	72.5	6.5	14	50	0.16
ASK46.3	150...200	276	98	90	9.0	17	70	0.50

ASK46.4

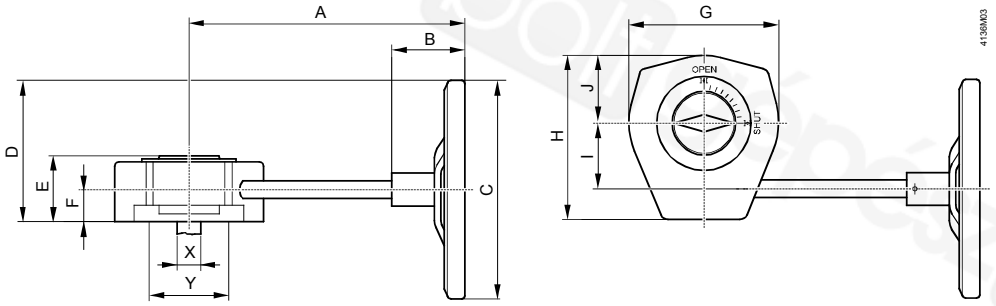

Type	DN	A	B	C ø	D	E	F	G	H	I	J	X □	Y	kg [kg]
ASK46.4	250...400	252	67	200	129	60	29	137	150	60	62	22	100	3.38

© 2001 – 2006 Siemens Switzerland Ltd