IMP PUMPS d.o.o. Pod hrasti 28 SI - 1218 Komenda Slovenia Phone: +386 (0)1 28 06 400 Fax: +386 (0)1 28 06 460

NMT PLUS 15/60-130

NMT SAN small / Electronically regulated threaded pumps for circulation of sanitary water
Heating, Climatisation

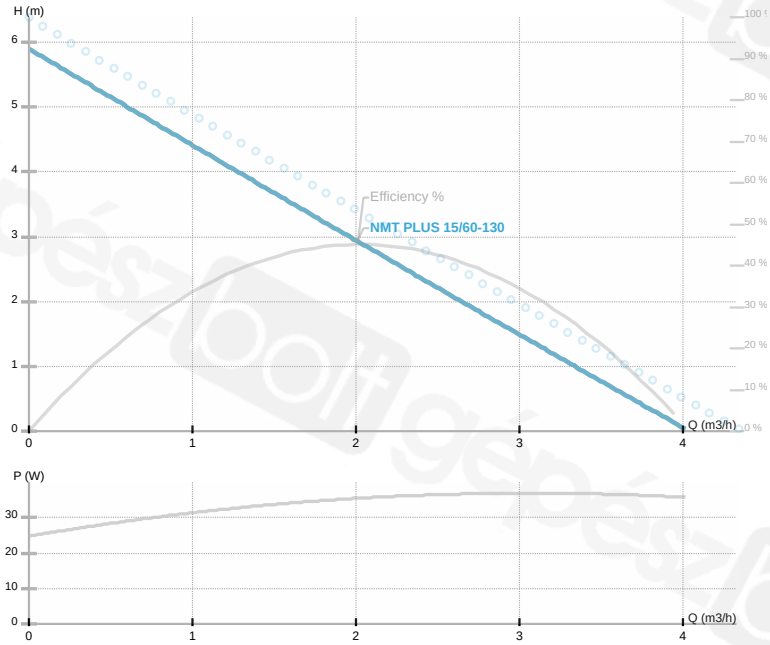

Part number	**979523843**
Power supply	**1~230 V**
Declared protection	**IP44**
Q max	**3.31 [m3/h]**
H max	**5.76 [m]**
RPM	**4100 [1/min]**
Motor power	**36 [w]**
Declared current	**0.32 [A]**
Fluid	**Water VDI 2035, glycol 40%**
Fluid temperature	**-10.0 ÷ 110.0 [°C]**
Insulation class	**F**
DN	**15 [mm]**
Connector	**Rp ½**
Net weight	**2.00 [kg]**
Length	**130 [mm]**
Approvals	**CE EAC**
EEI	**0.19**
Efficiency	**38.25 [%]**
Impeller material	**Noryl 1630V**
Bearing material	**Ceramics**
Shaft material	**Ceramics**
Hydraulics material	**Gray cast iron**
Mains frequency	**50 Hz**
Connection	**Rp ½**
Max pressure	**1.0 MPa**
Ambient temp.range	**40 deg C**

Dimension drawing

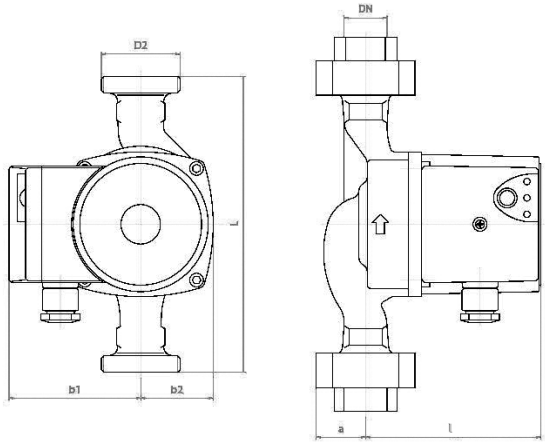

L=130 DN=15 b1=80 b2=48 l=108 a=27 D2=1
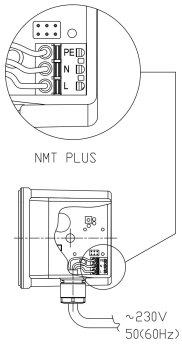
Electrical wiring